FH-BH6 & 7 BACKHOE

FHM

FARMER-HELPER
MACHINERY COMPANY

OPERATION & PARTS MANUAL

Please read these instructions before using. Always grease all fittings and be sure to always check and fill with oil before operating! Retain this manual for future use.

BETSTCO
RUGGED LABOR SAVING EQUIPMENT SINCE 1995
www. Betstco.com
541-895-3083 M-F 7am-4pm PST
83371 Melton Rd, Creswell OR 97426

Please Note

Make sure all potential operators of this equipment review this manual and all safety messages contained within.

This safety symbol indicates important safety messages in this manual. When you see this symbol, carefully read the message that follows and be alert to the possibility of personal injury or death.

CAUTION: It is Owner/Operator responsibility to ensure that the tractor three point top link, tractor frame & hydraulic lift cover area is strong enough to accept three point rigid connection and backhoe force while in operation as extra forces are exerted through 3-PT hitch system. No liability can be accepted for damage to tractor.

CONTENTS

1. SAFETY PRECAUTIONS

2. SAFETY DECALS

3. BACKHOE SPECIFICATIONS

4. INTRODUCTION

5. TRACTOR PREPARATION

6. BACKHOE OPERATION

7. BACKHOE REMOVAL

8. LUBRICATION AND MAINTENANCE

9. TROUBLE SHOOTING

10. HYDRAULIC SYSTEM SCHEMATIC

11. TORQUE TIGHTENING CHART

12. PART ILLUSTRATIONS

13. WARRANTY

1. SAFETY PRECAUTIONS

SAFETY

Understand that your safety and the safety of other persons is measured by how you service and operate this backhoe. Know the position and operations of all controls before you they to operate. Make sure you check all controls in all safe area before starting.

Read this manual completely and thoroughly and make sure you understand all controls. All equipment has a limit. Make sure you are aware of the stability and load characteristics of this backhoe before you begin operation.

The safety information given in this manual does not replace any safety codes, insurance needs, federal, state and local laws. Make sure your machine has the correct equipment required by your local laws and regulations.

CAUTION

This safety alert symbol indicates important safety messages in this manual. When you see this symbol, carefully read the message that follows and be alert to the possibility of personal injury or death.

SAFETY PRECAUTIONS

Before starting the engine of your tractor, make sure all operation controls are in park lock or neutral position.

Operate controls only when seated in the operator's seat.

Equip your tractor with a ROPS cab or frame for your protection. See your tractor operator's manual for correct seat belt usage.

A frequent cause of personal injury or death is persons falling off and being run over. Do not permit others to ride on your tractor. Only one person, the operator, should be on the machine when it is in operation.

Before leaving the tractor, stop the engine, put all controls in neutral, engage the parking brake and remove the key from the ignition.

When using remote hydraulic tractor valves on some tractors, the backhoe’s cylinders will continue moving unless the control levers are manually returned to neutral, or until relief pressure is reached at the ends of piston strokes. Observe the bucket movement and maintain control with the control levers.

Stop the backhoe arms gradually when lowering or lifting loads. Stay off of slopes too steep for safe operation. Shift down before you start up or down a hill with a heavy load. Avoid "free wheeling".

Travel speed should be such that complete control and machine stability is maintained at all times. Where possible, avoid operating operation near ditches, embankments and holes. Reduce speed when turning, crossing slopes, and on rough, slick or muddy surfaces.

Never use your hand to check for suspected leaks under pressure. Use a piece of cardboard or wood for this purpose. Escaping hydraulic oil or diesel fuel leaking under pressure can have sufficient force to penetrate the skin and cause infection or other injured by leaking fluid , seek medical attention immediately.

To prevent personal injury , relieve all pressure before disconnecting fluid lines.

Before applying hydraulic pressure, make sure all hydraulic connections are tight and components are in good condition.

Contact with overhead power lines can cause severe electrical burn or death from electrocution. Make sure there is enough clearance between raised equipment and overhead power lines.

Add recommended rear tire liquid weight or rear wheel weights for increased stability.

A backhoe attachment should be transported in a low position at slow ground speeds. Make turns slowly and use the tractor brakes cautiously. A loaded attachment in the raised position alters the center of gravity location of the machine and increases the possibility of mishaps.

Do not stand, walk or work under a raised backhoe or attachment unless it is securely blocked or held in position. Accidental movement of a control lever or leak in the hydraulic system could cause the backhoe to drop, or attachment to dump, causing severe injury.

Make sure all parked backhoes on stands are on a hard level surface with all safety devices engaged to prevent backhoe from falling and being damaged or injuring someone.

When using a backhoe, be alert of bucket, boom and arm position at all times.

2. SAFETY DECALS

Safety Decal Locations

Important: Warning decals are visible when getting on backhoe. Refer to the left and right hands used in this manual, It's the position of the operator when seated in the operating position of backhoe.

Care of Safety Decals.

1. Keep safety decals clean and free of obstructing material.
2. Clean safety decals with soap and water and dry with a soft cloth.
3. Replace damaged or missing safety decals with new decals from Betstco.
4. If a component with a safety decal(s) affixed is replaced with a new part, make sure new safety decal(s) are attached in the same location(s) as the replaced components.
5. Mount new safety decals by applying on a clean dry surface and pressing air bubbles to outside edges.

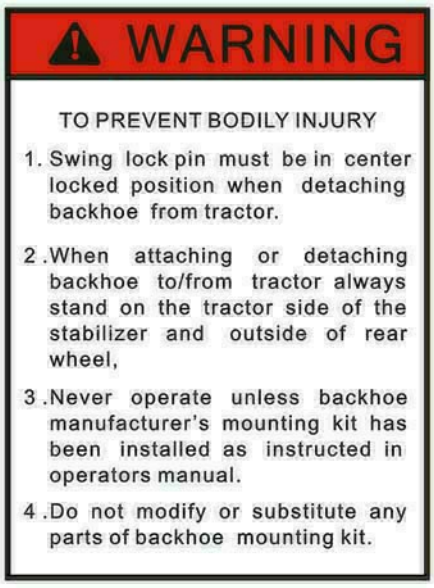

Location : Mainframe

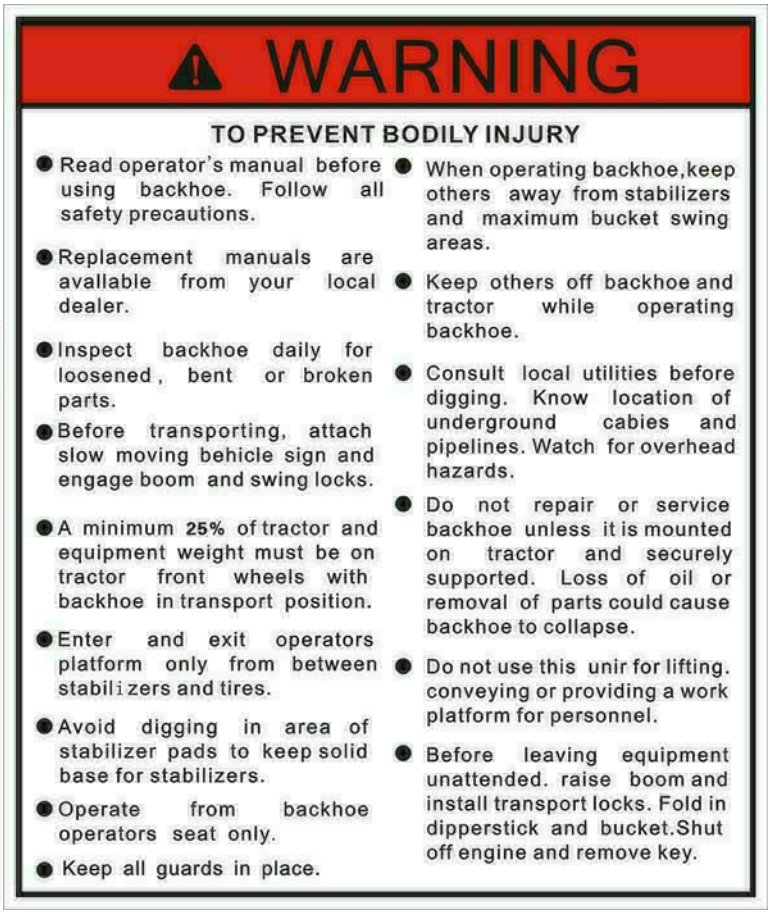

Location : Both of Mainframe sides

Location : Both Leg Cylinders

Location : Both side of Mainframe

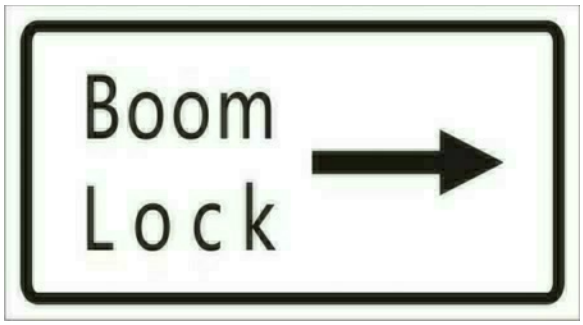

Location : Beside of the locking hole at the Boom Mainframe

Location : Main Valve Cover

Location : Right Leg Guard

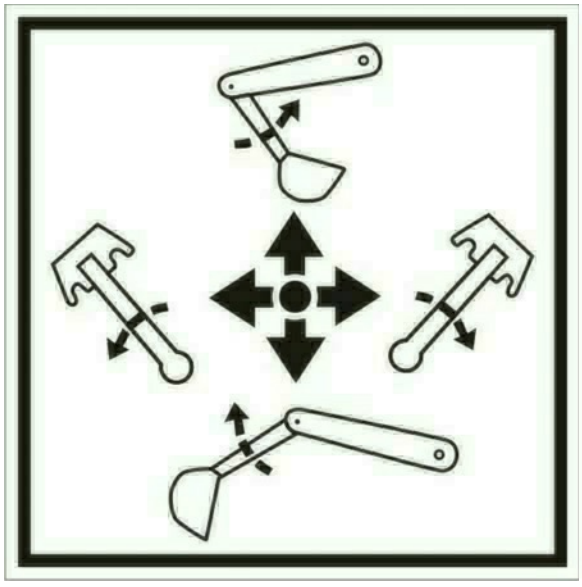

Location : Left side Valve Lever

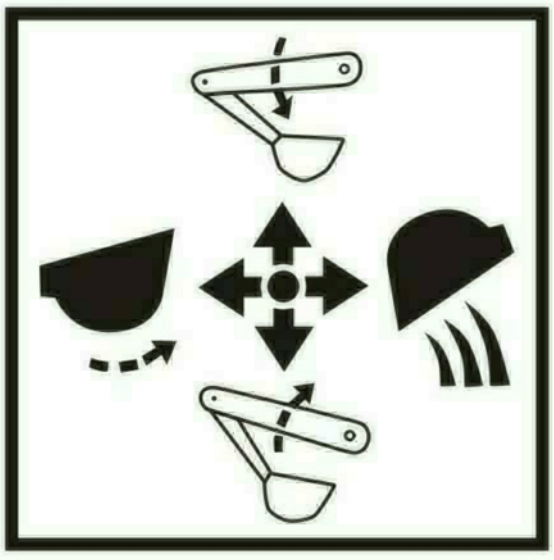

Location : Right side Valve Lever

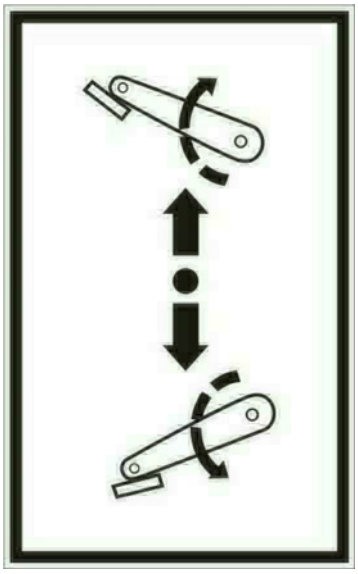

Location : Side of Left Inner Lever

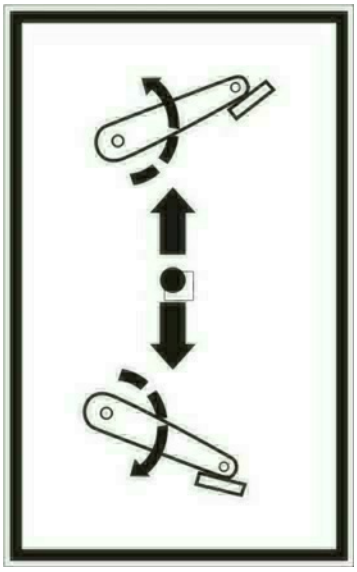

Location : Side of Right Inner Lever

Location : Both side of Dipperstick

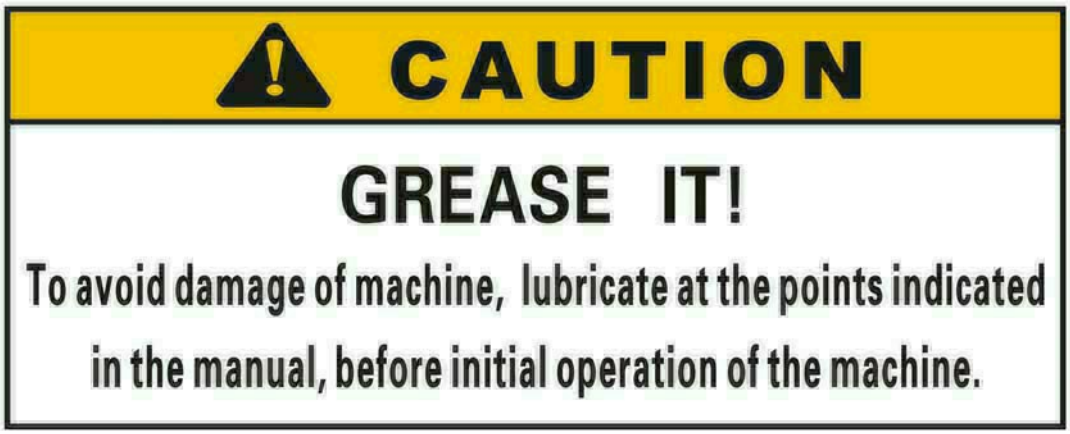

3. BACKHOE SPECIFICATIONS

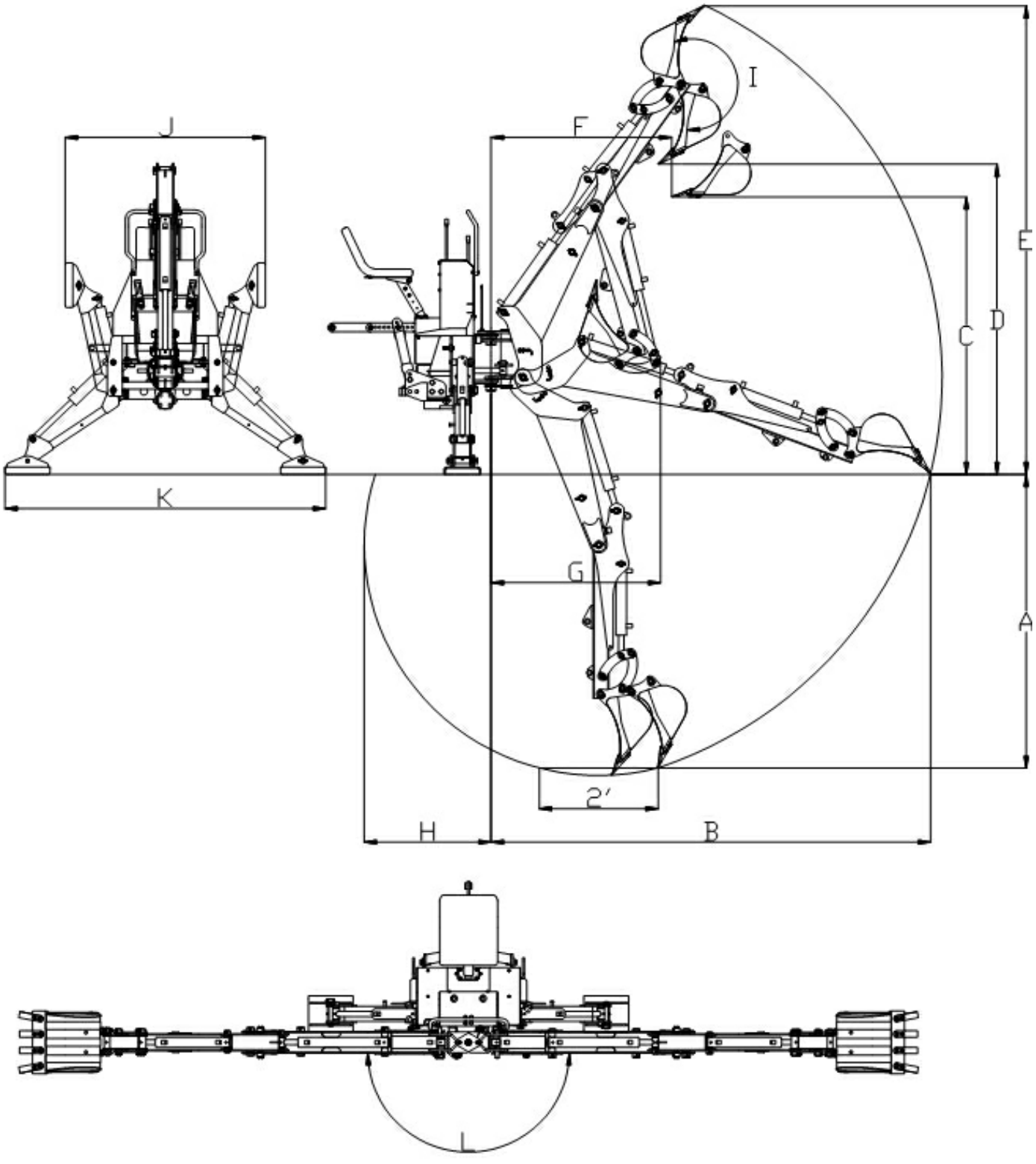

MODEL NUMBER		FH-BH6		FH-BH7	
SPECIFICATION		Inch	Metric	Inch	Metric
COMPACT TRACTOR HORSEPOWER		25+ HP		30+ HP	
3-POINT LINKAGE		Cat-I		Cat-I	
STRUCTURE WEIGHT		1060 lbs	480 kg	1100 lbs	500 kg
BUCKET DIGGING FORCE		2818 lbs	1278 kg	2818 lbs	1278 kg
DIPPER BOOM DIGGING FORCE		2105 lbs	955 kg	2105 lbs	955 kg
A	Digging Depth (2 foot flat bottom)*	6'	183cm	6'10"	201cm
B	Reach from center line of Swing Pivot	8'6"	260cm	9'3"	279cm
C	Loading Height (bucket at 60°)	5'8"	172cm	6'	184cm
D	Transport Height (Maximum)	6'	184cm	6'7"	206cm
E	Extended Height	9'5"	287cm	10'2"	311cm
F	Loading Reach (Bucket at 60°)	3'1"	95cm	4'6"	118cm
G	Transport Overhang	3'6"	108cm	3'8"	111cm
H	Undercut	2'5"	73cm	2'9"	83cm
I	Bucket Rotation	180 degrees		180 degrees	
J	Stabilizer Spread (Up - Transport)	4'4"	131cm	4'9"	131cm
K	Stabilizer Spread (Down Position)	7'2"	210cm	7'4"	210cm
L	Arm Swing Arc	180 degrees		180 degrees	
Measurements are based upon 20 inches under pivot point to ground!					

BH6,7,8

Cylinder	Bore Diameter		Retracted Length		Stroke		Rod Diameter	
	mm	inch	mm	inch	mm	inch	mm	inch
Boom	70	2.75”	682	26.85”	454	17.87”	35	1.38”
Bucket	70	2.36”	510	20.08”	308	12.13”	35	1.38”
Dipperstick	70	2.36”	565	21.98”	390	15.35”	35	1.38”
Swing	70	2.36”	403	15.87”	212	8.35”	35	1.38”
Stabilizer	70	2.36”	472	18.58”	268	10.55”	35	1.38”

Bucket Width	Teeth Qty.
7” wide	2
9” wide	2
12” wide	3
16” wide	4
18” wide	4
20” wide	5

Specifications may vary depending on tractor model, tire size and bucket used.

4. INTRODUCTION

The purpose of this manual is to assist you in maintaining and operating your FH-BH series backhoe. Read it carefully, it furnishes information and instructions that will help you achieve years of dependable performance. Some information may be general in nature due to unknown and varying conditions. However, through experience and these instructions, you should be able to develop operating procedures suitable to your particular situation.

"Right" and "Left" as used throughout this manual are determined by facing the direction the machine will travel when in use.

The photos, illustrations and data used in this manual are current at the time of printing, but due to possible in-line production changes, your machine may vary slightly in detail. The manufacturer reserves the right to redesign the machine as may be necessary without notification.

Important:

Illustrations used in this manual may not show all safety equipment that is recommended to ensure safe operation of tractor and backhoe. Refer to the safety precautions section of this manual for information concerning safety. consult your dealer for further information.

Warranty Registration

The delivery and warranty registration forms must be filled out and signed to validate your warranty protection. The items on the form under "I hereby acknowledge" should be read and understood. The terms and conditions of the warranty on this machine are specified in the front of this manual.

Serial Number and Location

The serial number is important information about the machine and it may be necessary to know it before obtaining the correct replacement part. The serial number is located on the right side of backhoe mainframe. The serial number should be recorded on the delivery and registration form and also below for your reference.

Farmer-Helper

Model _____

Serial No: _____ CE

Date MFD _____

5. TRACTOR PREPARATION

Rear Counterweight

⚠ CAUTION
Do not exceed the manufacturer's rating for maximum gross vehicle weight. Refer to operator's manual or ROPS serial plate provided with tractor. Certain specific conditions may not permit safe use of backhoe at backhoe rating or may require more careful restricted operation at the rated load.

ROPS System

The tractor must be equipped with an approved ROPS System to ensure adequate operator's protection.

Tractor Hydraulic System

Tractor operation in a backhoe application significantly increase demands on the tractor hydraulic system. Check the tractor hydraulic system fluid level daily. Refer to your tractor operator's manual maintenance section for instructions regarding tractor hydraulic system maintenance.

Adhere to recommendation in your tractor operator's manual concerning hydraulic fluid and filter specifications, and change intervals.

⚠ CAUTION
The tractor/backhoe must only be operated with all safety equipment properly installed.

Tire Inflation

Front tires must be maintained at the maximum recommended inflation to maintain normal tire profile with the added weight of backhoe/material.

Rear tires must be maintained at equal pressure within the recommended tire inflation range. Unequal rear tire inflation can prevent backhoe attachment from contacting the ground across its full width.

Wheel Tread Settings

Tractor front wheel tread setting must be restricted to wheel tread spacing recommended in the tractor operator's manual.

5.1 PTO CONNECTION

Ensure PTO shaft is correct length, correct PTO shaft length must have a minimal overlap of 2” in drive position. See PTO driveline manual for proper steps to reduce overall PTO driveline length. Connect PTO shaft to tractor, PTO output shaft and backhoe hydraulic pump shaft. Check PTO shaft has suitable angle prior to operation. Angle of PTO shaft universal must be less than 25 degrees, to prevent major damage.

CAUTION: Backhoe should be mounted to the tractor three point linkage.

CAUTION: Never store backhoe without bucket attached to the backhoe.

CAUTION: Never raise 3-PT position/draft lever while backhoe is connected, damage could occur to linkage and hydraulic system or void the warranty. Use mechanical means to secure levers in down positions.

CAUTION: It is Owner/Operator responsibility to ensure that the tractor three point top link, tractor frame & hydraulic lift cover area is strong enough to accept three point rigid connection and backhoe force while in operation as extra forces are exerted through 3-PT hitch system. No liability can be accepted for damage to tractor.

6. BACKHOE ASSEMBLY & MOUNTING

-After removing from crate.

-You may need suitable support to lift and hold backhoe behind 3 pt during assembly.

-Remove plug on top of hydraulic tank and fill with tractor hydraulic fluid to level indicator on side of tank.

USE EXTREME CAUTION DURING CONNECTION TO THE TRACTOR.

-The 3-PT mounting frame is adjustable to suit most tractor models with Cat 1 3-PT linkage.

1. **Connect tractor 3-PT arms to lower mounting frame pins. ***
2. **Connect PTO and move bucket down to lift boom to move main frame into vertical position. Lower stabilizers to balance backhoe. Raise lift arms until 3-PT top link frame will be close to horizontal with top link connection on tractor. See below for PTO Connection details.**
3. **Connect and adjust top link assembly. 1 bolt under tower (Longest), 2 bolts in middle (medium length), and 1 bolt to top link.**
4. **Connect left hand and right hand lock out brace to the correct hole and secure the bolt and nut tightly. (shortest bolts)**
5. **Lower and manually lock the tractor 3-PT position/draft lever. (See tractor's operation manual)**

-Attach seat with bolts & nuts provided.

-Operate all cylinders in and out 2 times. Check oil level again and fill as needed.

-Attach all safety labels

-Grease all 28 points as detailed below in lubrication section

IF YOU HAVE ANY QUESTIONS DURING ASSEMBLY PLEASE CALL SUPPORT AT (541)895-3083.

*** Most people will raise the lower 3-PT hitch arm to a lever position and then adjust the main frame to vertical. This is fine and is the best position for safe transport, however the lower or closer the backhoe is to the ground the deeper it can dig.**

6.1BACKHOE

CAUTION The tractor/backhoe should only be operated with all safety equipment properly installed. Keep assistants or bystanders a safe distance from the equipment operating area.

Precautionary Notes

-Check below items before operating for your safety.
-Read and understand this manual to avoid accidents.
-Check the hydraulic fitting lines to be correct and set tightly.
-Maintain and repair (if needed) the parts or assemblies, check bolts and pins to be sure they are positioned tightly.
-Warm up and operate the tractor and backhoe carefully. Purge any air in the hydraulic lines and cylinders by fully extending all cylinders several times.
-Check hydraulic level in the tank. It should be full (Refer to the Tractor Operator's Manual).
-Do not operate the hydraulics when not seated in the back-hoe operator's seat.
-Keep all assistants out of area of operation.
-Do not operate rapidly.
-Do not allow riders other than the operator to be on the tractor while operating.

Important: Use tractor engine speed that your experience permits. At first set PTO RPM of the tractor to slow.

Do not use the boom, dipperstick, swing and stabilizers to lift, push or pull objects. THIS IMPROPER USE OF THE BACKHOE MAY DAMAGE HOE AND WILL NOT BE COVERED BY WARRANTY! They are only to be used to maneuver and operate the bucket.

Important: Practice quickly turning off the engine or stopping the backhoe immediately in case of an emergency situation.

Important: Do not operate while the rear tractor wheels are off the ground by stabilizer. It is dangerous to operate the backhoe while rear wheels are off the ground, and creates force on your tractor frame that may damage tractor.

Position vehicle so that the backhoe is as near to the pile as possible and in such a direction as to minimize the amount of tractor turning required to dump.

Keep the unit clean and perform regular service. Observe safety messages whenever cleaning, servicing, or lubricating.

We urge you to follow this advice:
1. Read and understand this manual as well the tractor operator's manual.
2. Remember and observe the safety precautions brought to your attention in this manual, the tractor manual and on the machinery itself.
3. Use good common sense in the everyday operation of this unit. Safety recommendations can never be all-inclusive and you are responsible for watching out for and avoiding unsafe conditions.
4. Never exceed the limits of a piece of machinery. If its ability to do a job, or to do so safely, is in question, don't try it.

5. Don't hurry the learning process or take the unit for granted. Ease into it and become familiar with your new backhoe and tractor.

CAUTION
When lowering a heavy load, ease it downward slowly. Never drop a loaded attachment and "catch it hydraulically". Stopping a load after it has gained downward momentum places undue strain on the unit and may cause unnecessary damage to the backhoe or tractor or even worse, personal injury. Before disconnecting hydraulic lines, relieve all hydraulic pressure. Escaping hydraulic oil under pressure can have sufficient force to penetrate the skin causing serious personal injury. If injured by escaping hydraulic oil, seek medical attention immediately.

CAUTION
Do not operate the backhoe if the fittings are leaking or if the hoses are damaged. A sudden line burst would cause the boom, or dipperstick bucket to drop suddenly, causing damage to the tractor or backhoe or injury to personnel.

Initial Backhoe Operation

Before operating the backhoe, fully raise and lower the boom, arm, swing and stabilizers two or three times. Then raise the bucket above the ground and cycle the bucket cylinders three times. Lower the bucket to the ground.

Check the tractor hydraulic oil and the correct oil level.

CAUTION
Before leaving the machine, stop the engine, remove the key, place all controls in neutral, and either set the parking brake or place tractor in park as equipped.

Always keep cylinders in a retracted position when the backhoe is not in use to guard against rust and contamination which may cause damage to the cylinder rods or hydraulic system. Also, lock the swing and boom while tractor is moving and storing for an extended period of time.

Cold Weather Operation

For smooth operation in cold weather, let the tractor warm up. Slowly cycle all of the cylinders several times to warm the oil in the hydraulic system. The backhoe may operate erratically until the hydraulic oil has warmed to operating temperatures.

CAUTION
Operate controls only when seated in the operator's seat.

Left and Right stabilizer Controls

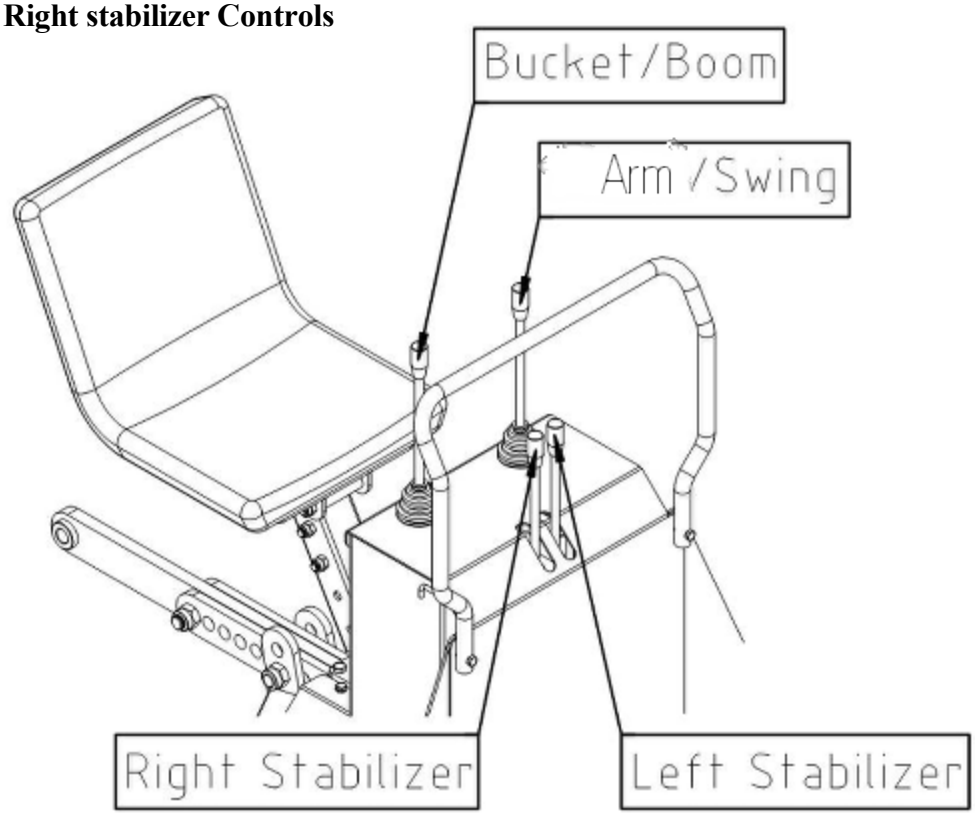

Left and Right Stabilizer Controls

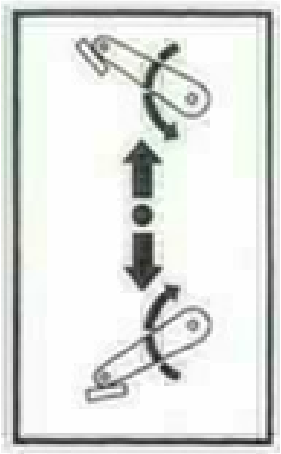

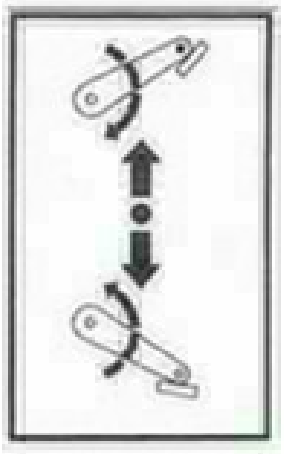

Push the left hand inner control lever, left stabilizer lowers. And pull up the lever, left stabilizer raises.
Push the right hand inner control lever, right stabilizer lowers. And pull up the lever, right stabilizer raises.
Do not dig near the stabilizers to avoid possible accident. Do not lift the tractor rear wheels by stabilizers. Also, be sure the stabilizers are seated on hard ground to support.
The backhoe/tractor.

Arm and Swing Controls

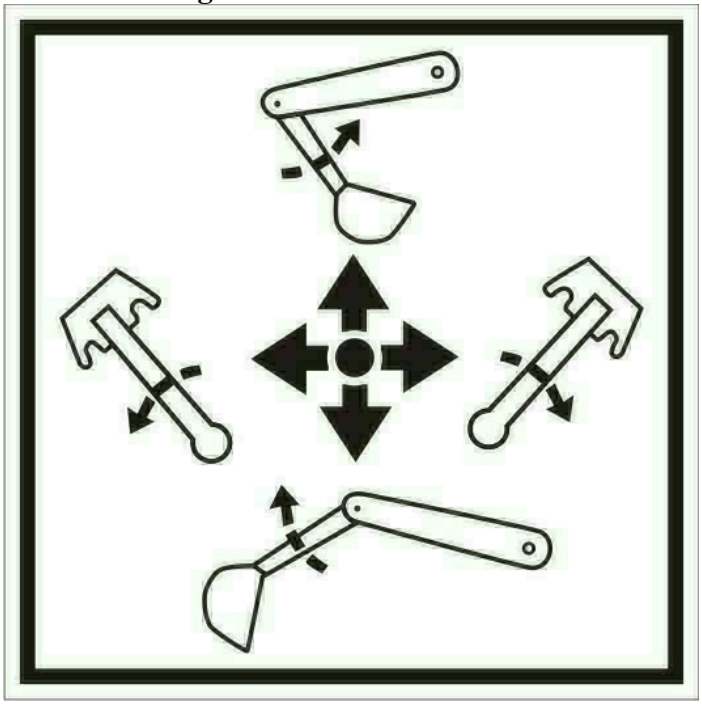

Push the left hand outer control lever, arm (dipperstick) moves toward the operator, and pull back the lever, arm (dipperstick) moves away from operator.
Move the left hand outer control lever to the left, boom swings moves to the left. Move lever right, boom swing moves to the Right.

Bucket and Boom Controls

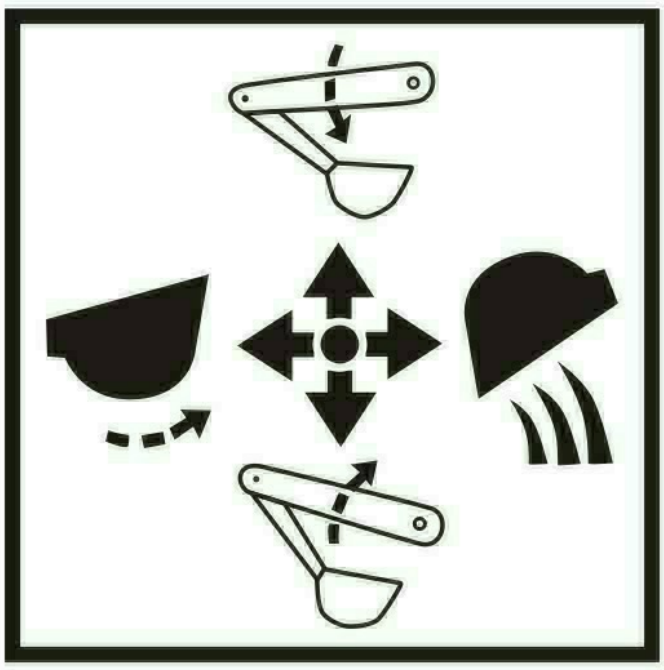

Push the right hand outer control lever, boom moves down, and pull back the lever, boom moves up.
Move the right hand outer control lever to the left, bucket curls in. Move lever right, bucket extends out from operator.

These two levers (arm and swing control lever, bucket and boom control lever) provide four simultaneous operations. Both experience and practice are needed to eliminate excess motion and increase operating efficiency.

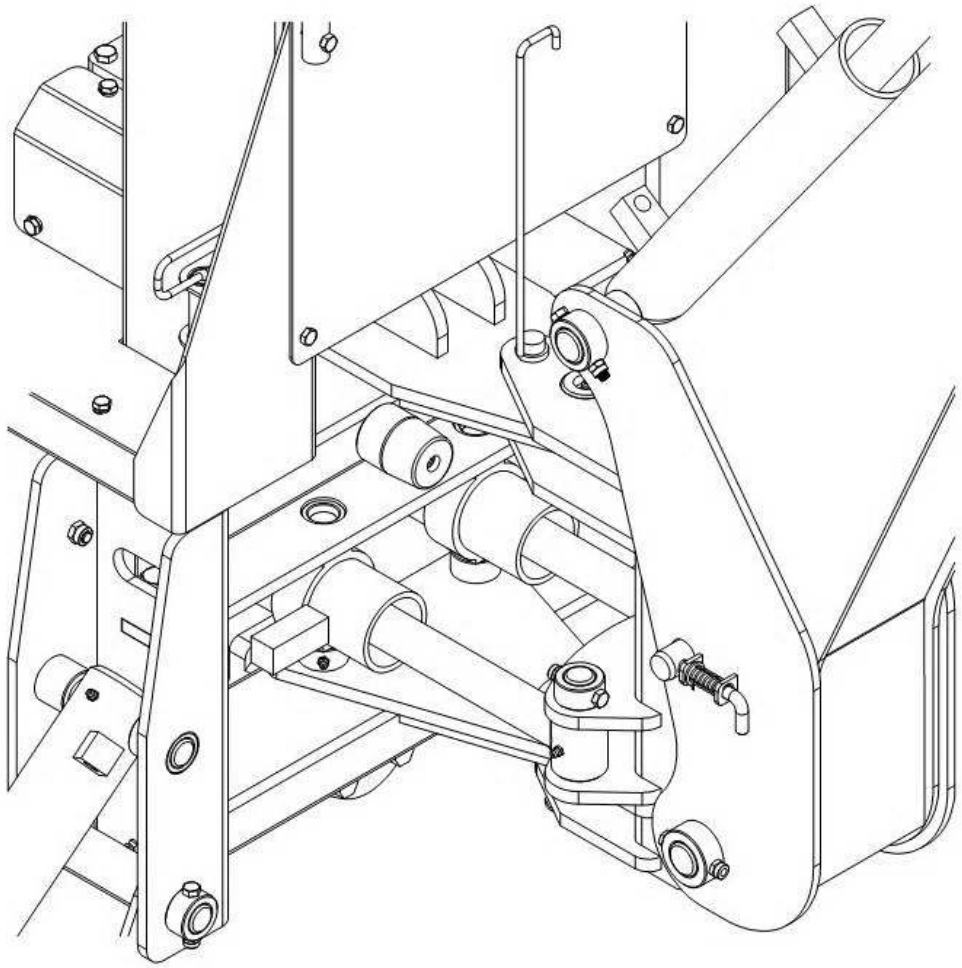

Swing lock and boom lock: When transporting or dismounting backhoe, you must lock the backhoe's swing and boom. Position boom straight back and drop pin through holes in swing frame and boom. When not in use, store pin in hole provided on swing frame and boom. Observe the following safety warnings when working with your new backhoe/tractor.

⚠ CAUTION

When using a backhoe, be aware of bucket and boom location at all times. When raising a arm (dipperstick) with bucket rolled forward, material can spill onto non target area causing injury to assistant or damage other objects.

Do not dig near stabilizers. Ground under stabilizers could collapse. Make all movements slow and gradual when practicing operation.

Operate from backhoe operators seat only. Pay attention, be ready to stop, immediately in case of an emergency.

To help prevent roll-over, adjust the rear wheels to their widest setting to maximize stability. Refer to your tractor operator's manual for recommendations.

7.. BACKHOE REMOVAL

⚠ CAUTION
Move the backhoe to flat, firm and wide place to remove the equipment. Do not allow to be removed without bucket and stabilizers. Also, dump the remaining material from the bucket to empty. Use other lifting equipment to remove when the backhoe has damage.

STEP 1. Move the tractor to backhoe storage place.
STEP 2. Use the inner two levers to lower the stabilizers until they contact to the ground. Use the boom and dipperstick control lever to raise the boom & dippers-tick completely.
STEP 3. Center the boom and then lock the swing with lock pin.
STEP 4. Using the control levers, position the dipperstick vertically, curl the bucket until its bottom is level with the ground, and lower the boom until bottom of the bucket rest on the ground.
STEP 5. Remove pins that secure the backhoe. top link suspension in the mounting brackets on the

⚠ CAUTION
Remove the backhoe on firm level ground. Also, do not allow the other person in the area. Be careful to avoid injury during removal of the backhoe. The hydraulic oil is dangerous for skin or eyes. Wash the skin and seek medical service if it is necessary.

STEP 6. Using both the stabilizer and boom control, set the backhoe top link suspension horizontally to relieve the weight of the backhoe from the mounting brackets of the tractor.

STEP 7. Move the tractor forward slowly until the backhoe top link suspension disengages of the mounting brackets.

STEP 8. Lower the backhoe mainframe to the ground by raising stabilizers and boom. Use the wood plate or block if necessary.

STEP 9. Turn off the tractor engine. Relieve hydraulic pressure by actuating all the control

8. LUBRICATION AND MAINTENANCE

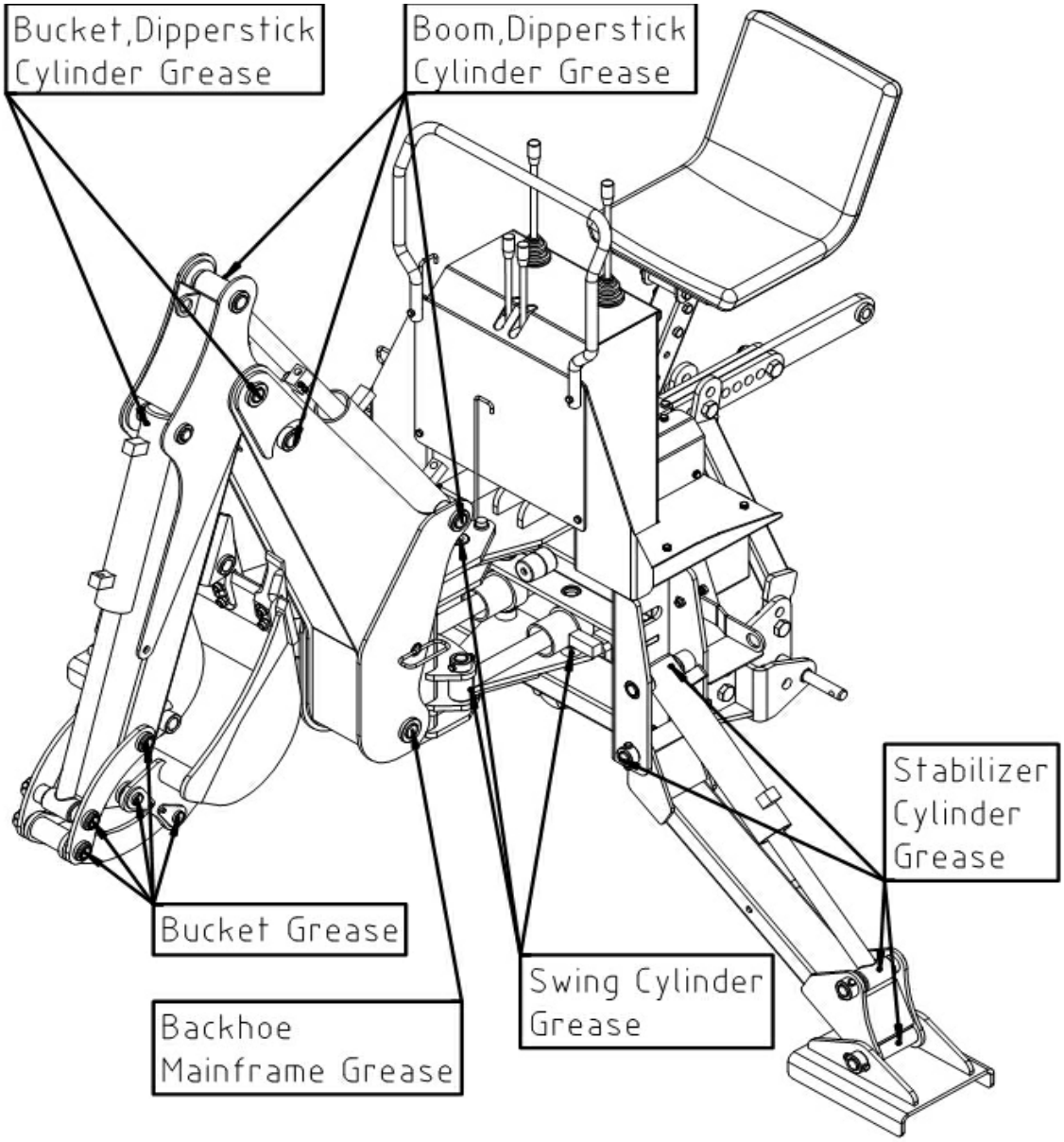

ITEM	SERVICE	SERVICE INTERVAL
Hydraulic System Oil Level	Check	Daily/10 hours
Hydraulic System Oil/Filter	Clean	Yearly or / 100 hours
Tire Inflation	Check	Weekly/50 hours
Backhoe Pivot Points	Lubricate	Daily/10 hours
Backhoe Hydraulic Lines, Hoses, Connections	Check for leaks, wear	Daily/10 hours
Boom, Arm, Swing and Bucket cylinder rod packing	Check for seepage, service as needed	Daily/10 hours
Pivot pin bolts and dust covers	Check, replace if missing	Daily/10 hours
Friction of All pins	Check, replace if necessary	Daily/10 hours
Backhoe mount hardware Bolts and Nut release	Check visually Re-torque	Daily/10 hours Every 25 hours

⚠ CAUTION
Do not perform service or maintenance operations with backhoe raised off the ground. For additional access to tractor components remove backhoe.

Important:
Lower the backhoe to the ground and relieve pressure in backhoe hydraulic lines prior to performing any service or maintenance operations on the tractor or backhoe.

⚠ CAUTION
Escaping fluid under pressure can have sufficient force to penetrate the skin , causing serious injury . Before disconnecting lines, be sure to relieve all pressure. Before applying pressure to the system, be sure all connections are tight and that lines, pipes and hoses are not damaged. Fluid escaping from a very small hole can be almost invisible. Use a piece of cardboard or wood rather than your hands to search for suspected leaks. If injured by escaping fluid, seek medical attention immediately. Serious infection or reaction can develop if correct medical treatment is not administered immediately.

Refer to "Lubrication and Maintenance Chart" for quick reference to maintenance operations.

⚠ CAUTION
Do not operate the backhoe if the fittings are leaking or if the hoses are damaged. A sudden line burst could cause the boom, dipperstick or bucket to drop suddenly, causing damage to the tractor or backhoe or injury to personnel. Operate the backhoe from the operator seat only. Do not stand or walk under a raised backhoe. Accidental movement of control lever or leak in hydraulic system could cause boom or dipperstick to drop, causing severe injury.

Check the hydraulic system

NOTE
When checking hydraulic system oil level, the backhoe should be on the ground and bucket fully retracted (all cylinders in retracted position).

Grease all backhoe pivot points daily (10 hours).

Inspect hydraulic hoses, connections, control valve and cylinders for evidence of leakage.

Tractor tires should be maintained at maximum recommended inflation to maintain normal tire profile with added weight of backhoe/material. Unequal rear tire inflation can result in bucket not being level to the ground.

9. TROUBLE SHOOTING

This trouble shooting chart is provided for reference to possible backhoe operational problems. Determine the problem that best describes the operational problem being experienced and eliminate the possible causes as listed by following the correction procedures.

PROBLEM	POSSIBLE CAUSE	CORRECTION
Swing, Boom, Dipperstick and Bucket Cylinders Not operating properly	Low hydraulic fluid level.	Check and replenish hydraulic fluid.
	Hydraulic hoses connected improperly	Check and correct hydraulic hose connections
	Hydraulic hoses to/from control valve blocked	Check for damage (kinked) hoses, etc
	Backhoe control valve	Check system pressure. Repair or replace relief valve.
	Low system pressure supplied from hydraulic pump	Check system pressure. Repair or replace pump
	Control valve linkage broken	Inspect. Repair as required
	Hydraulic hose or tube line blockage	Check for evidence of damage to hoses or tube lines that would block flow of oil between cylinders and control valve
	Cylinder piston assembly defective (not sealing)	Check cylinders for internal leakage as described in service section under cylinder leakage tests.
	Control valve blockage	Inspect for blockage. Disassemble valve if necessary.
Cylinders operate in wrong direction relative to control valve lever position	Hydraulic hoses connected incorrectly	Correct hydraulic hose connections

Slow or erratic movement of Cylinders (Noisy operation of cylinders)	Low hydraulic fluid level.	Check and replenish hydraulic fluid
	Cold hydraulic fluid	Allow hydraulic system to warm up to operating temperature
	Hydraulic Oil viscosity too heavy or Incorrect oil	Check oil number and viscosity, Refill correct hydraulic oil
	Engine RPM too slow (hydraulic pump RPM too slow)	Increase engine speed to obtain satisfactory backhoe operation
	Excessive weight in bucket. Material weight exceeds maximum specified backhoe capacity	Reduce material load. (Digging load)
	Control valve linkage binding/defective	Check control valve linkage and repair if worn/defective.
	Aeration of hydraulic fluid	Refer to "Aeration of Hydraulic Fluid"
	Hydraulic hose or tube line restriction (hoses/tube line) kinked or pinched	Check hoses and tube lines for evidence of restriction
	Boom, Dipperstick or Bucket cylinder piston assembly leakage	Check cylinders for leakage. Repair as needed
	Relief valve erratic or set below specifications	Check and reset relief valve. Setting as needed.
	Control valve leaking Internally. (Hi-passing fluid within valve).	Replace control valve and recheck operation.
Inadequate lifting capacity	Engine RPM too slow.	Increase engine RPM
	Excessive load. Material loading exceeds specified backhoe capacity	Reduce Load
	Relief valve setting below specifications	Check and reset relief valve setting as needed.
	Bucket, Boom and Dipperstick cylinder piston assembly leakage	Check cylinders for leakage. Repair as needed
	Control valve leaking internally	Replace control valve and recheck operation
	Hydraulic pump defective	Refer to "Hydraulic Pump Capacity Inadequate".
Aeration of Hydraulic Fluid(Generally indicated by foamy appearance of fluid)	Low hydraulic fluid level	Check and refill hydraulic system to proper level.
	Air leaking into suction side of hydraulic pump.	Check for loose or defective connections between reservoir and hydraulic pump
	Hydraulic fluid foaming due to improper hydraulic oil usage	Uses Tractor hydraulic oil.

System relief valve squeals.	Cold Hydraulic Fluid	Allow hydraulic fluid to warm up to operating temperature
	Hydraulic Oil viscosity too heavy or Incorrect oil	Check oil number and viscosity, Refill correct hydraulic oil.
	Excessive load in bucket. Loading exceeds specified backhoe capacity	Reduce load
	Relief valve setting below specifications	Check and reset valve setting as needed
	Hydraulic hose, tube line or quick disconnect coupler restriction	Check for evidence of restriction in hydraulic oil flow. Repair or replace defective components
Backhoe drops with valve spool in "centered" position (no external oil leakage evident) Note: A gradual drop over an extended period of time is a normal condition.	Cylinder piston assembly leakage	Check cylinders for leakage
	Control valve internal leakage	Replace control valve and recheck
Control valve spool(s) will not return to centered position	Control lever linkage binding	Determine origin of binding and repair
	Control valve spool centering is broken	Replace centering spring
	Control valve spool binding in valve body spool bore	Disassemble valve for inspection and repair.
External hydraulic fluid leakage	Loose hydraulic connection	Tighten loose connections
	Defective hydraulic hose, tube line, adapter fitting or adapter fitting o-ring	Check for origin of oil leak and replace defective part.
	Control valve o-rings defective	Replace defective o-rings
	Control valve spool or body damaged or worn	Replace control valve
	Cylinder rod packing set leakage	Check cylinders for leakage. Repair as needed
Hydraulic pump capacity inadequate	Cold hydraulic fluid	Allow hydraulic fluid to warm up to operating temperature
	Engine RPM too slow	Increase engine RPM
	Low hydraulic fluid supply Hydraulic hose restriction	Check for evidence of restriction in hydraulic hoses
	Hydraulic pump defective	
Cylinder rod bend when cylinders extended	Excessive shock load on cylinders during transport	Replace defective parts. Review and observe proper and safe operational practices

10. HYDRAULIC SYSTEM SCHEMATIC

AUXILIARY HYDRAULIC VALVE PACKAGE

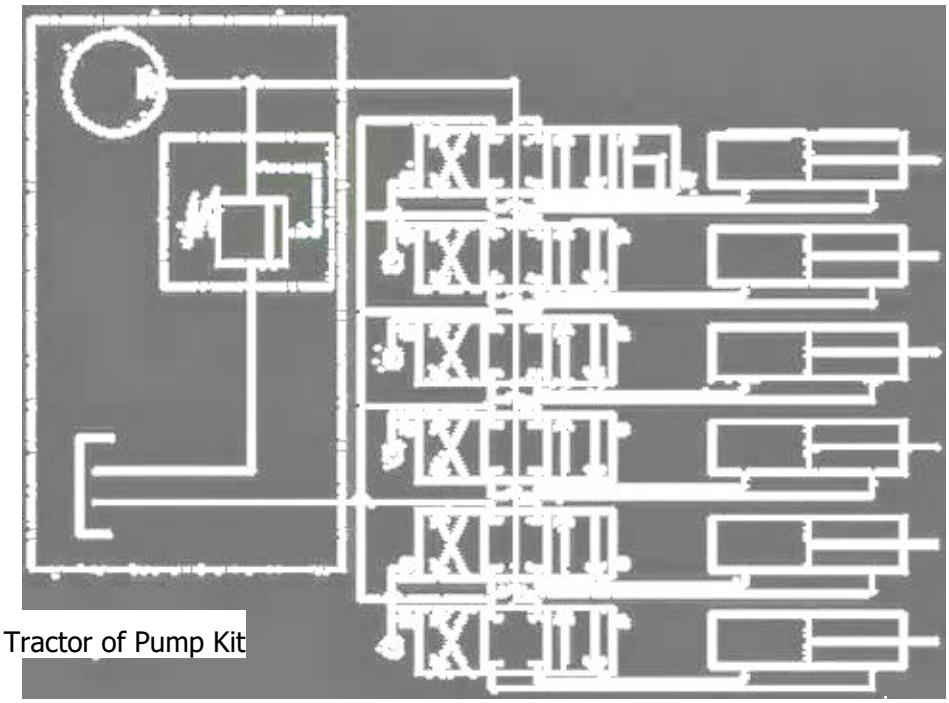

Tractor of Pump Kit

Dipperstick Cylinders

Swing Cylinders

Left Stabilizer Cylinders

Right Stabilizer Cylinders

Bucket Cylinder

Boom Cylinder

11. TORQUE TIGHTENING CHART

TORQUE TIGHTENING CHART 1

Note:Use these torques, unless special torques are specified. Values are for UNF thread fasteners, plasted or unplated as received from supplier. Fasteners can be dry or lubricated with normal engine oil. Values do not apply if graphite, moly-disulphide or other extreme pressure lubricant is used.

SAE Grade No.	2				5				8*			
Bolt head identification (see note 1)												
Bolt size	LB - FT		Nm		LB - FT		Nm		LB - FT		Nm	
	Min	Max	Min	Max	Min	Max	Min	Max	Min	Max	Min	Max
1/4	5	6	7	8	9	11	12	15	12	15	16	20
5/16	10	12	14	16	17	20.5	23	28	24	29	33	39
3/8	20	23	27	31	35	42	48	57	45	54	61	73
7/16	30	35	41	47	54	64	73	87	70	84	95	114
1/2	45	52	61	70	80	96	109	130	110	132	149	179
9/16	65	75	88	102	110	132	149	179	160	192	217	260
5/8	95	105	129	142	150	180	203	244	220	264	298	358
3/4	150	185	203	251	270	324	366	439	380	456	515	618
7/8	160	200	217	271	400	480	542	651	600	720	814	976
1	250	300	339	406	580	696	787	944	900	1080	1220	1464
1 1/8					800	880	1085	1193	1280	1440	1736	1953
1 1/4					1120	1240	1519	1681	1820	2000	2468	2712
1 3/8					1460	1680	1980	2278	2380	2720	3227	3688
1 1/2					1940	2200	2631	2983	3160	3560	4285	4827

Note 1: Bolt head identification marks as per grade. Manufacturing marks will vary. *Thick nuts must be used with Grade 8 bolt

TORQUE TIGHTENING CHART 2

METRIC FASTENER (ISO) TORQUE CHART

Note: Use these torques, unless special torques are specified. Values are UNC and UNF thread fasteners,plated or unplated as received from supplier. Fasteners can be dry or lubricated with normal engine oil. Values do not apply if graphite, moly-disulphite or other extreme pressure lubricant is used

ISO Class No.	8.8				10.9				12.9			
Bolt head identification (see note1)												
Bolt Size	Nm		LB - FT		Nm		LB - FT		Nm		LB - FT	
	Min	Max	Min	Max	Min	Max	Min	Max	Min	Max	Min	Max
M4	3	4	2	3	4	5	3	4				
M5	6 ,5	8	5	6	9 ,5	11	7	8				
M6	10 ,5	12	8	9	15	17 ,5	11	13				
M8	26	31	19	23	37	43	27	32				
M10	52	61	38	45	73	87	54	64				
M12	90	107	66	79	125	150	93	112				
M14	144	172	106	127	200	245	149	179				
M16	217	271	160	200	310	380	230	280				
M20	434	515	320	380	610	730	450	540				
M24	675	815	500	600	1050	1275	780	940				
M30	1250	1500	920	1100	2000	2400	1470	1770				
M36	2175	2600	1600	1950	3500	4200	2580	3090				

Because of the low ductility of these fasteners, the torque range is to be determined individually for each application. As a general rule, the torque ranges specified for grade 10.9fasteners can be used satisfactorily on 12.9 fasteners

*M14 is not a preferred size.

Note 1: Bolt head identification marks as per grade. Manufacturing mark will vary.

Dipperstick and Bucket

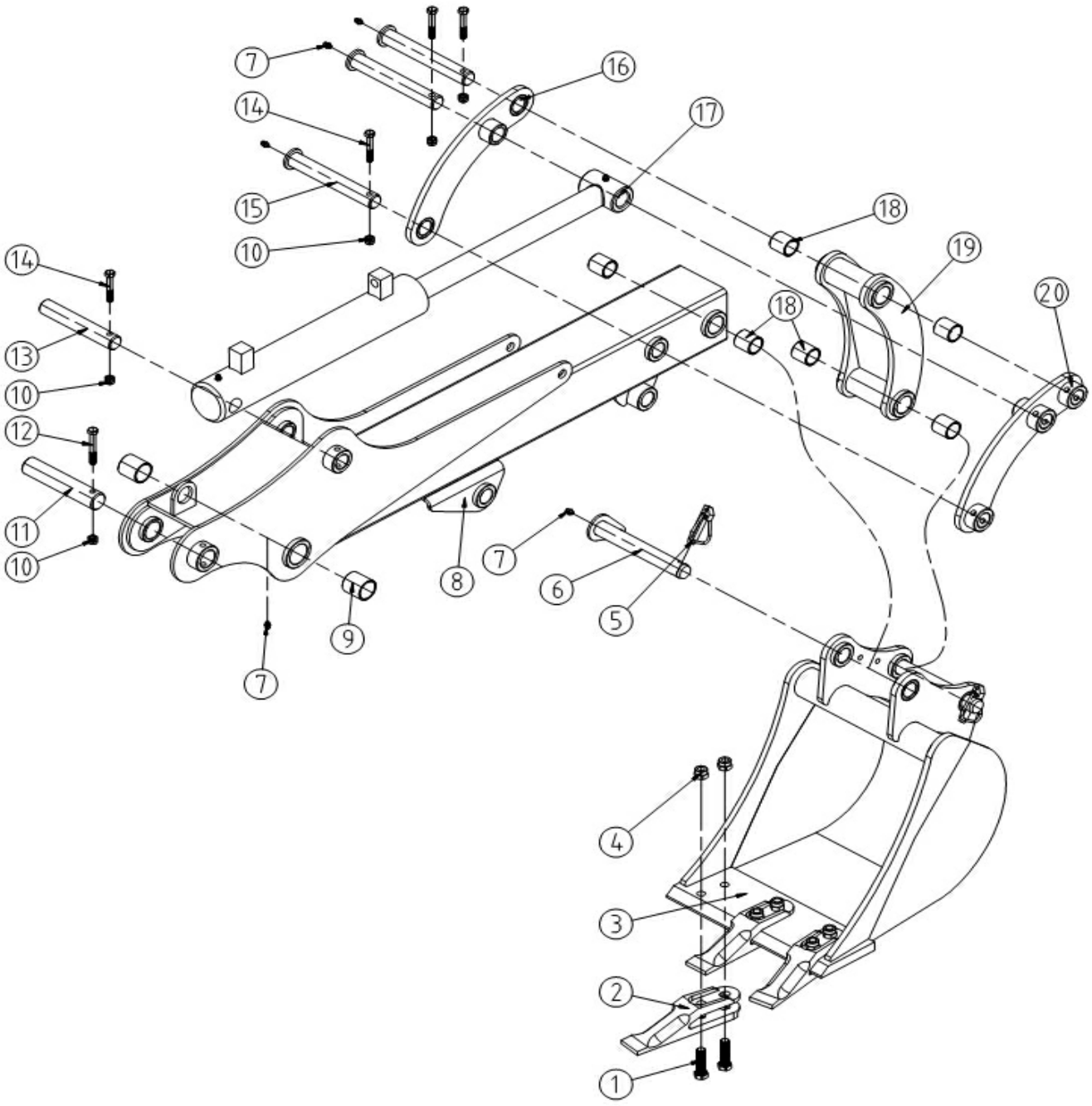

Boom Arm

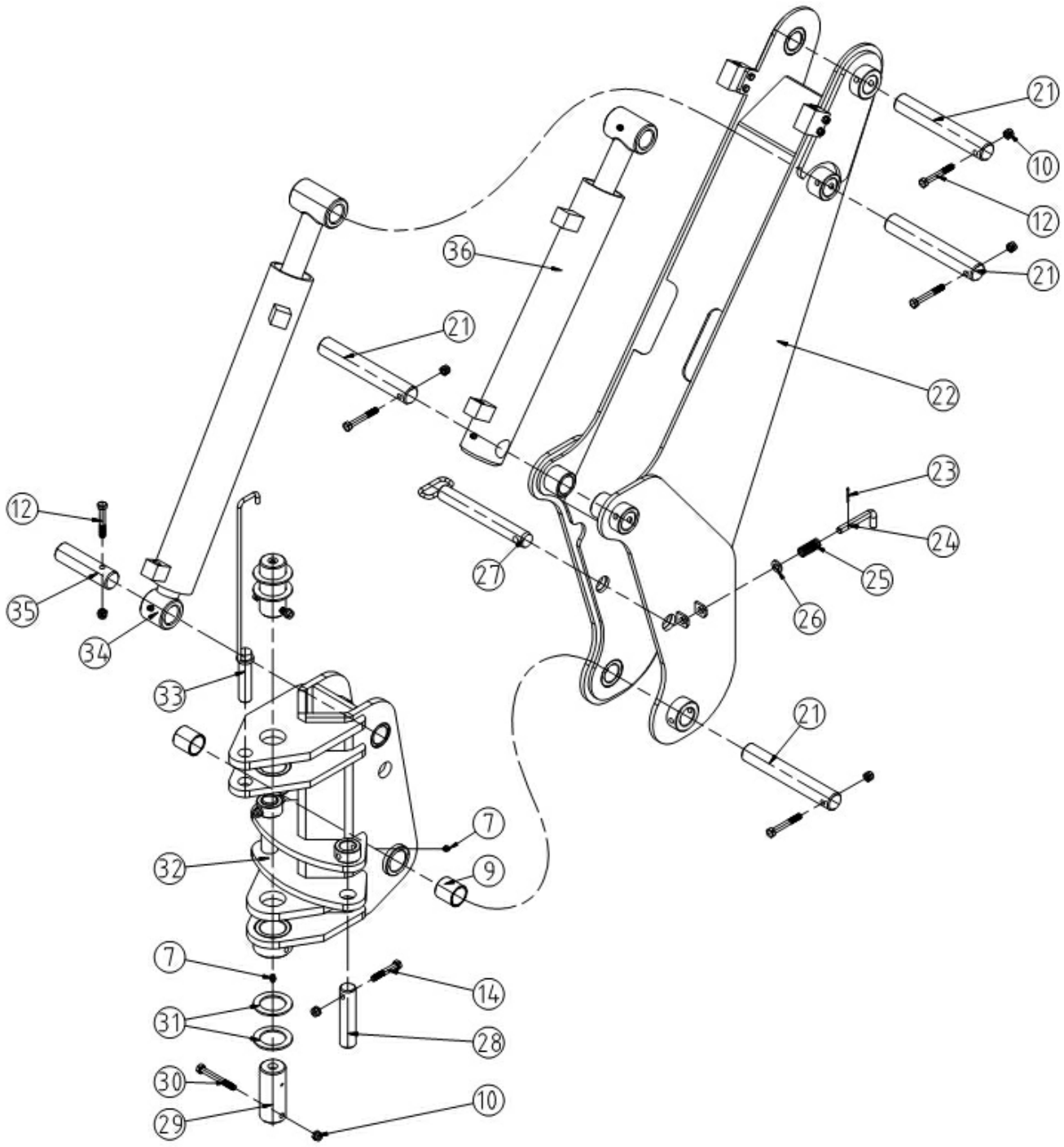
21
10
12
21
36
21
22
23
24
25
26
27
12
35
34
33
21
7
9
32
7
14
31
28
30
10
29

Stabilizer and Swing Frame

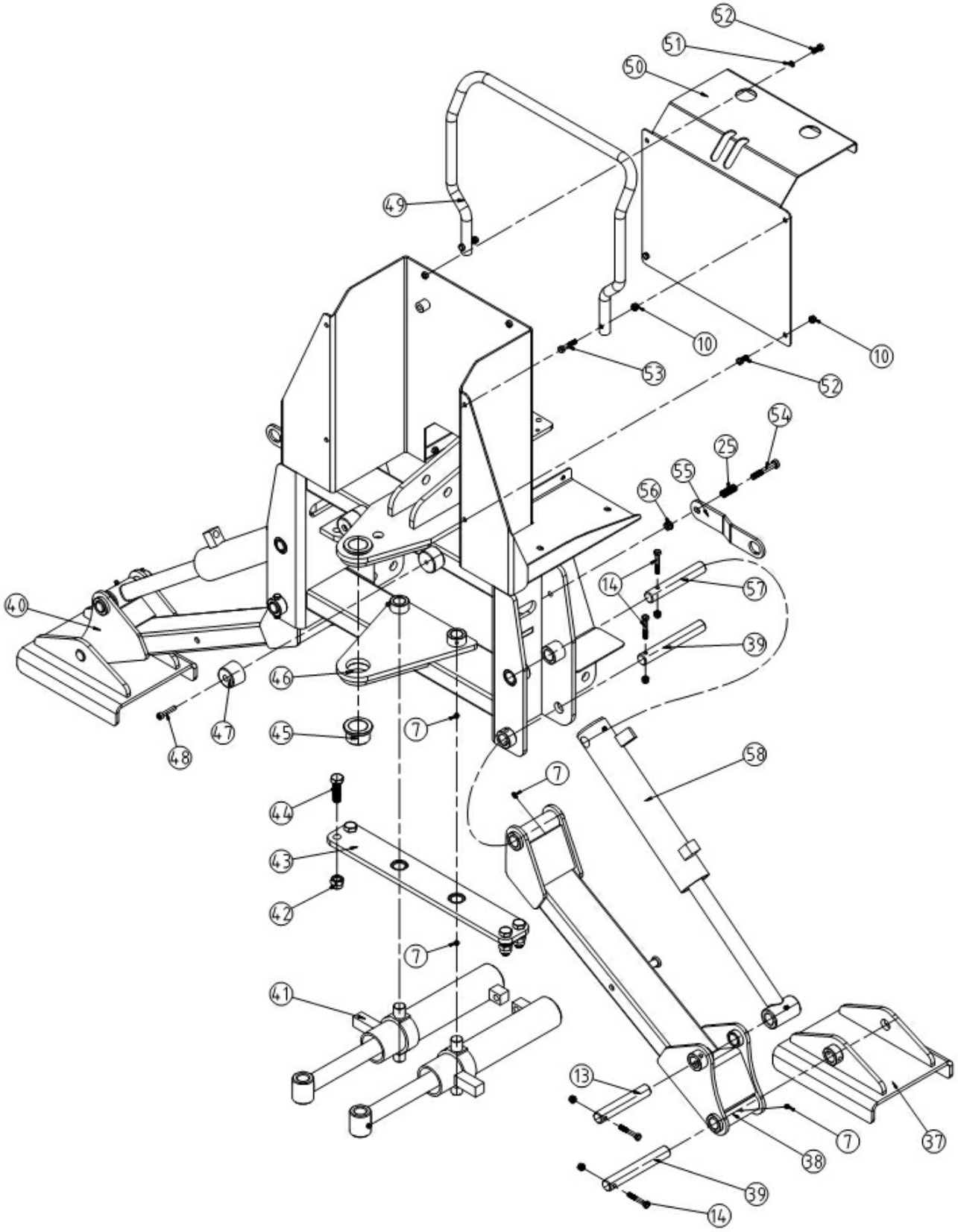

Seat and Mount Top Link Suspension

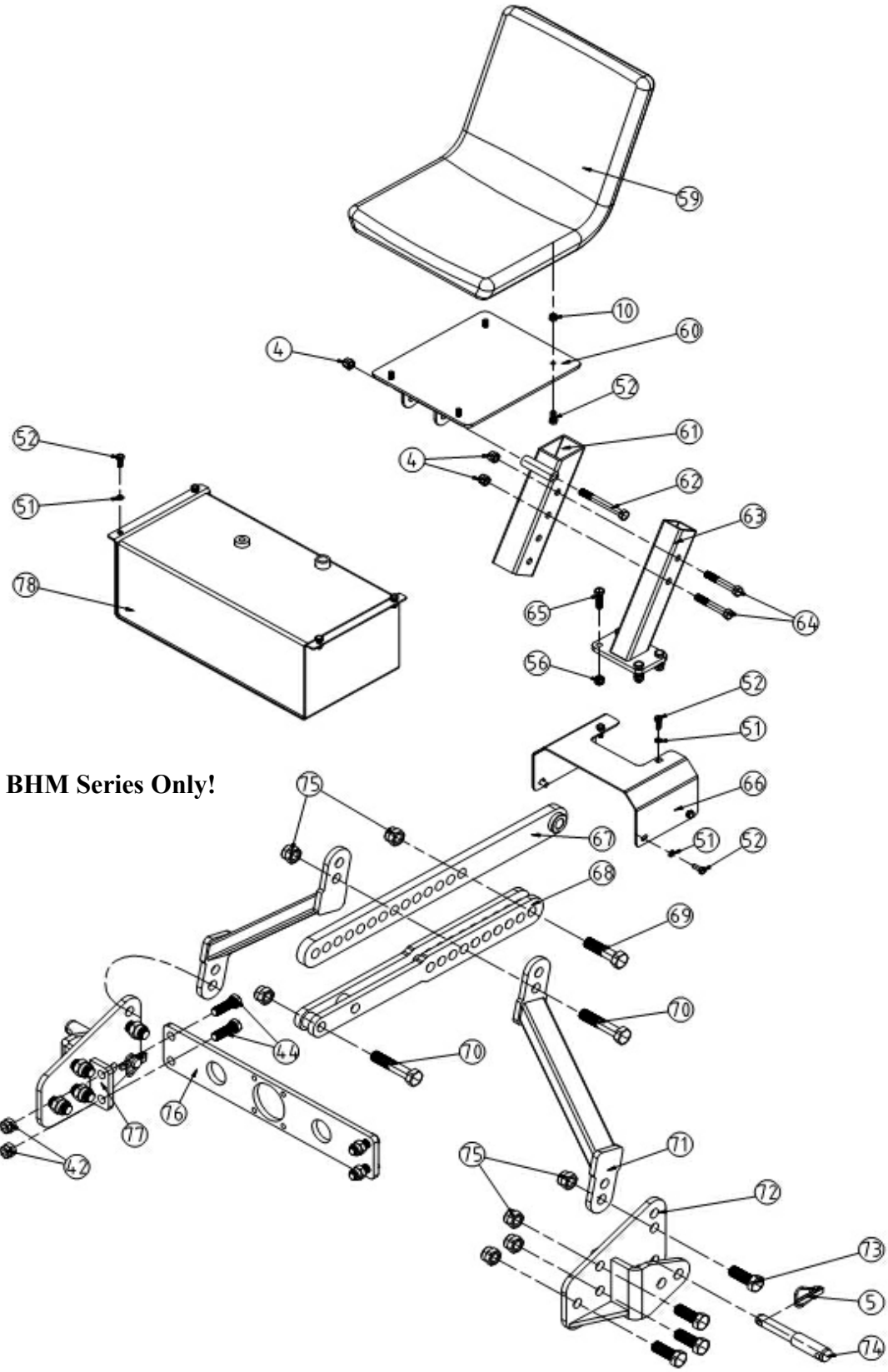

Tank on BHM Series Only!

BH Series Tank and Pump System

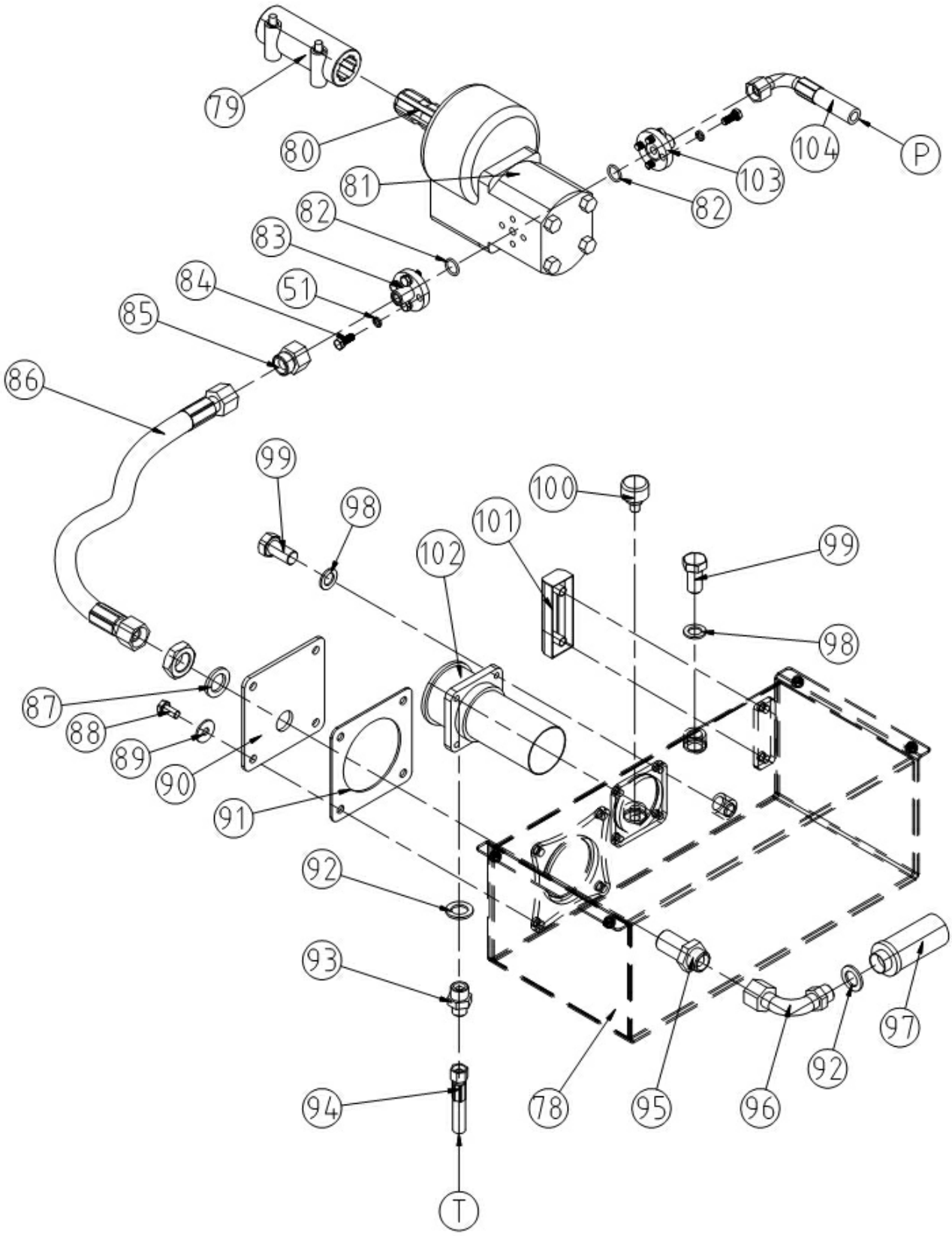

Hydraulic Control System

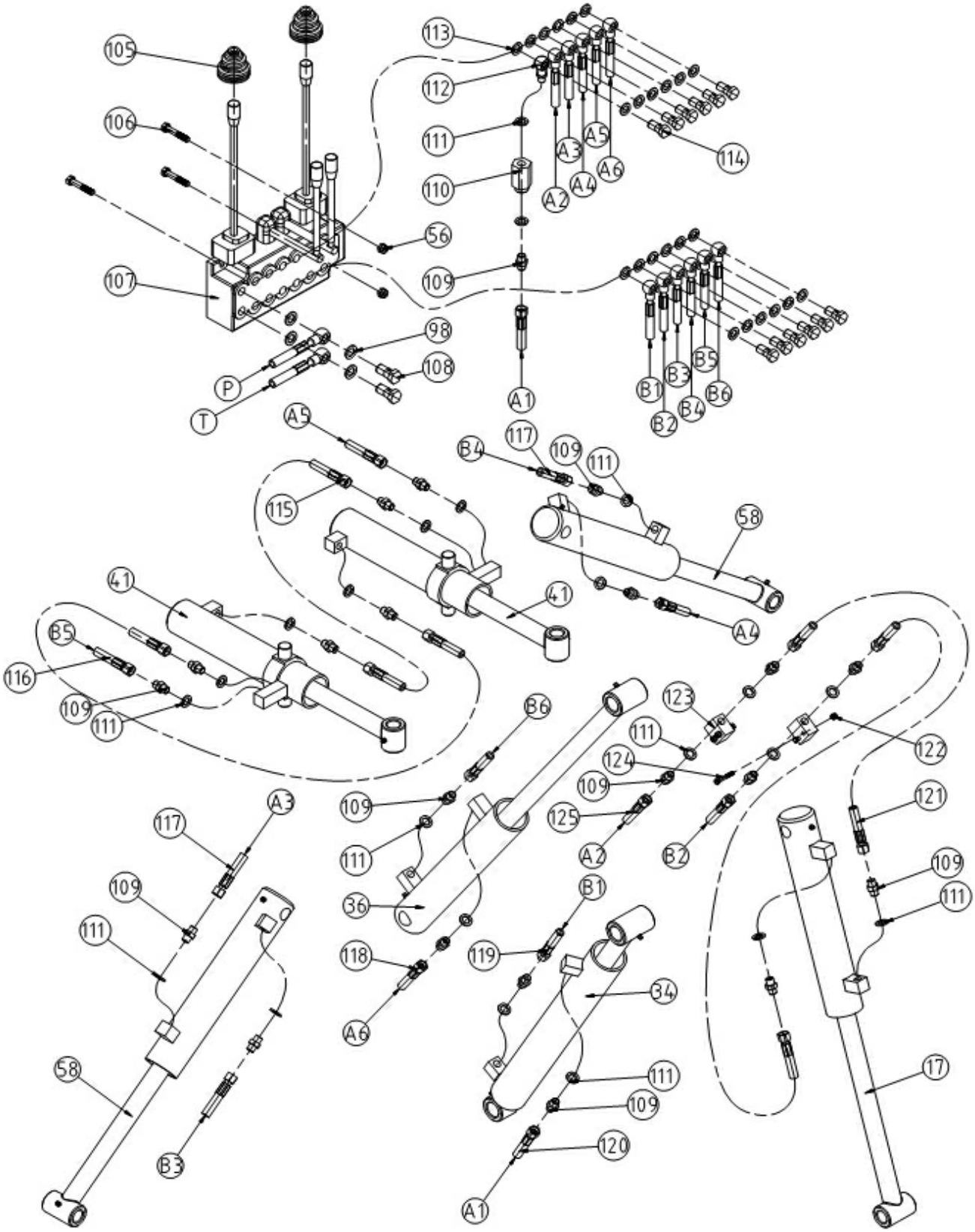

FH-BH6 & 7

NO.	PART NO.	Name & Specifications	Quantity
1	GB/T5782-2000	Bolt M12*50	7
2	BK6N.01.105	Blade	3
3	BH195.017	Bucket Weldment	1
4	GB/T889.1-2000	Locking Nut M12	10
5	BH195.014	Locking Pin 12	4
6	BH195.013	Pin Shaft for Bucket	2
7	JB/T7940.1-1995	Oil Cup M8	17
8	BH175.019 BH195.019	Front Arm Weldment	1
9	SF-2	Sleeve 30*34*35	4
10	GB/T889.1-2000	Locking Nut M8	30
11	BH195.103	Pin 30*144	1
12	GB/T5782-2000	Bolt M8*60	6
13	BH195.102	Pin 25*146	3
14	GB/T5782-2000	Bolt M8*50	14
15	BH195.101	Pin	3
16	BH195.015	Moon Plate Weldment Left	1
17	BH175.018 BH195.018	Bucket Cylinder	1
18	SF-2	Sleeve 25 X 29 X 30	6
19	BH195.012	Bucket Adaptor Weldment	1
20	BH195.016	Moon Plate Weldment Right 1	
21	BH195.104	Pin 30 X 190	4
22	BH175.020 BH195.020	Boom Weldment	1
23	GB/T91-2000	Cotter Pin 2 x 20	1
24	BH195.115	Pin	1
25	BH195.105	Spring	3
26	GB/T97.1-2002	Plain Washer 10	1
27	BH195.039	Boom Locking Pin Weldment	1
28	BH195.109	Pin 25 X 108	2
29	BH195.116	Swing Shaft	2
30	GB/T5782-2000	Bolt M8 x 70	2
31	BH195.107	Washer	4
32	BH195.032	Swing Frame Weldment	1
33	BH195.040	Swing Locking Pin Weldment	1
34	BH195.022	Boom Cylinder	1
35	BH195.110	Pin 30 x 112	1
36	BH175.021 BH195.021	Front Arm Cylinder	1
37	BH195.038	Stabilizer Board Weldment	2
38	BH195.033	Left Stabilizer Rod Weldment	1

39	BH195.106	Pin 25*180	4
40	BH195.036	Right Stabilizer Rod Weldment	1
41	BH195.031	Swing Cylinder	2
42	GB/T889.1-2000	Locking Nut M16	8
43	BH195.035	Cross Bar Weldment	1
44	GB/T5783-2000	Bolt M16*50	8
45	BH195.108	Copper Bush	2
46	BH195.041	Base Weldment	1
47	BH195.117	Rubber Cushion	2
48	GB/T70.1-2000	Bolt M8*40	2
49	BH195.114	Hand Rail	1
50	BH195.118	Up Cover Board	1
51	GB/T93-1987	Spring Washer 8	20
52	GB/T5783-2000	Bolt M8*20	18
53	GB/T5782-2000	Bolt M8*40	2
54	GB/T5782-2000	Bolt M10*60	2
55	BH195.113	Fix Plate for Stabilizer	2
56	GB/T889.1-2000	Locking Nut M10	8
57	BH195.112	Pin 25*160	2
58	BH195.037	Stabilizer Cylinder	2
59	BK6N.05.101	Seat	1
60	BH195.023	Seat Plate Weldment	1
61	BH195.024	Height Adjusting Weldment	1
62	GB/T5782-2000	Bolt M12*110	1
63	BH195.025	Seat Sustain Plate Weldment	1
64	GB/T5782-2000	Bolt M12*80	2
65	GB/T5783-2000	Bolt M10*35	4
66	BH195.119	Cover	1
67	BH195.026	Adjusting Weldment	1
68	BH195.027	Pull Plate	1
69	GB/T5782-2000	Bolt M20*80	1
70	GB/T5782-2000	Bolt M20*100	2
71	BH195.028	Suspensive plate weldment	2
72	BH195.029	Left bracket weldment	1
73	GB/T5783-2000	Bolt M20*50	8
74	BH195.120	Pin for lifting	2
75	GB/T889.1-2000	Locking Nut M20	11
76	BH195.111	The plate fix the pump	1
77	BH195.030	Right bracket weldment	1
78	BH195.034	Oil tank weldment	1
79	BK6N.07.001	Sleeve assembly	1
80	PG-3	Gearbox	1
81	CBN-E316	Gear pump CBN-E316	1
82	GB3452.1	O-ring 18x23x2.5	2
83	BH5.60.103	Pump adapter,in	1

84	GB/T5783-2000	Bolt M8*25	8
85	BH5.60.104	Pump conversion adapter	1
86	BH5.60.012	Pump inlet hose	1
87	JB/ZQ4454	Gasket 27	1
88	GB/T5783-2000	Bolt M10*20	4
89	GB/T 96.1-2002	Plain washer 10	4
90	BH5.40.106	Filter plate	1
91	BH5.40.107	Gasket	1
92	JB/ZQ4454	Gasket 22	2
93	BH5.60.107	Adapter 22-18	1
94	BH5.60.013	Valve return hose	1
95	BH5.60.105	Adapter 27	1
96	BH5.60.106	Bend adapter	1
97	WU-25x100J	Filter	1
98	JB/ZQ4454	Gasket 18	6
99	JB/ZQ4451	Plug M18x1.5	2
100	C-M12	Air filter C-M12	1
101	YWZ-76	Oil level indicators with thermometer	1
102	RFA-25	Oil filter	1
103	BH5.60.102	Pump adapter,out	1
104	BH5.60.011	Valve inlet hose	1
105	BH5.50.102	Rubber cover	2
106	GB/T5782-2000	Bolt M10*55	3
107	DF6250	Valve DF6250	1
108	BH5.60.101	Hollow bolt 18	2
109	BH5.60.109	Adapter 14-14	21
110	MK6	Throttle valve	1
111	JB/ZQ4454	Gasket 14	22
112	BH5.60.108	Ball adapter	1
113	JB/ZQ4454	Gasket 16	24
114	BH5.60.110	Hollow bolt 16	12
115	BH195.048	Hose, Swing To Swing	2
116	BH195.047	Hose, Valve To Swing	2
117	BH195.046	Hose to Stablizer	4
118	BH195.049	Hose, Valve To Dipperstick	2
119	BH195.043	Hose, Valve to Boom 1	1
120	BH195.045	Hose, Valve to Boom 2	1
121	BH175.044 BH195.044	Hose, Adapter to Bucket	2
122	GB/T889.1-2000	Locking Nut M6	4
123	BH195.121	Adapter base	2
124	GB/T5782-2000	Bolt M6*40	4
125	BH195.042	Hose, Valve to Adapter	2

FHM
FARMER-HELPER
MACHINERY COMPANY

Parts Request Form

Fax to 541-895-2756 or E-mail
cservice@betstproducts.com

Name: _____

Address: _____

City State Zip: _____

Phone: _____

E-mail: _____

Model Number: _____

Serial Number: _____

Purchased From: _____

Purchase Date: _____

Item No.	Description	Qty	Price	Amount

Comments:

Farmer Helper Machinery Brand
LIMITED WARRANTY

FARMER HELPER MACHINERY CO. LTD. warrants to original Purchaser that FARMER HELPER MACHINERY CO. LTD. products are free from major defects in material under normal use and service for a period of Two (2) Years from the date the product is purchased or shipped, whichever is later. Commercial use 180 days. Use at address that is not yours, is considered commercial use. Consumable, Expendable, Wear Items (Examples:Rubber & plastic parts, hydraulic hoses, belts, tires, cables, blades, tines, wedges, teeth, tips, chains, pins, brushes, filters, etc.) and cracked hydraulic pumps, bent or broken cylinder rods are not covered under this warranty. Warranty does not cover items that have been modified, damaged by abuse or usage not in accordance with design or maintenance.

FARMER HELPER MACHINERY CO. LTD.'s. obligation under this warranty is to repair or replace defective product. upon determination by; Betst Products, llc., 83371 Melton Rd. N., Creswell OR 97426 that Warranty Claim is Valid. Product shall be returned upon request of Betst Products, llc. Transportation charges to be prepaid by buyer. **Gasoline or diesel engines used to powered FARMER HELPER MACHINERY CO. LTD. products are covered by the warranty of the appropriate engine manufacture and Purchaser must look to the engine manufacture for all issues relating to engine operation.**

Farmer-Helper Machinery nor Betst Products, llc. assumes any responsibility for labor.

PERMISSIBLE BY APPLICABLE LAW, FARMER HELPER MACHINERY CO. LTD. HEREBY DISCLAIMS ALL WARRANTIES OF ANY KIND, EITHER EXPRESS OR IMPLIED, INCLUDING, ANY IMPLIED WARRANTIES WITH RESPECT TO THE PRODUCT PURCHASED, WITHOUT LIMITING THE GENERALITY OF THE FOREGOING, FARMER HELPER MACHINERY CO. LTD. HEREBY EXPRESSLY DISCLAIMS ALL LIABILITY FOR PRODUCT DEFECT OR FAILURE, CLAIMS THAT ARE DUE TO NORMAL WEAR, PRODUCT MISUSE, ABUSE, PRODUCT MODIFICATION, IMPROPER PRODUCT SELECTION, NON-COMPLIANCE WITH ANY CODES, OR MISAPPROPRIATION.• FARMER HELPER MACHINERY CO. LTD.. MAKES NO WARRANTIES TO THOSE DEFINED AS "CONSUMERS" IN THE MAGNUSON-MOSS WARRANTY-FEDERAL TRADE COMMISSION IMPROVEMENTS ACT. THE FOREGOING EXCLUSIONS OF IMPLIED WARRANTIES DO NOT APPLY TO THE EXTENT PROHIBITED BY LAW. PLEASE REFER TO YOUR LOCAL LAWS FOR ANY SUCH PROHIBITIONS

THERE SHALL BE NO LIABILITY FOR PRODUCT LIABILITY OR LIABILITY ON THE PART OF BETST PRODUCTS, LLC. FOR ANY GENERAL, SPECIAL OR CONSEQUENTIAL DAMAGES ARISING OUT OF THE SALE OR USE OF ANY PRODUCTS SOLD BY BETST PRODUCTS, LLC OR AN AGENT THEREOF. BETST PRODUCTS, LLC. MAKES NO WARRANTIES, EXPRESS OR IMPLIED, (INCLUDING, BUT NOT LIMITED TO, ANY WARRANTY OF MERCHANTABILITY OR FITNESS OF THE PRODUCTS FOR ANY PURPOSE) WITH RESPECT TO THE PRODUCTS COVERED BY THIS AGREEMENT EXCEPT AS IN THIS PARAGRAPH OTHERWISE EXPRESSLY PROVIDED.

THIS IS THE SOLE AND ONLY WARRANTY OF FARMER HELPER MACHINERY CO. LTD. PRODUCTS. NO OTHER WARRANTY IS APPLICABLE, EITHER EXPRESSED OR IMPLIED, IN FACT OR BY LAW,

This warranty shall not be interpreted to render Betst Products, llc., or any authorized agent liable for injury or damages of any kind or nature, direct, consequential, or contingent, to person or property.

The sole and only remedy in regard to any defective products shall be the repair or replacement thereof as herein provided. Betst Products, llc., agent(s) of Betst Products, llc. shall not be liable for any consequential, special, incidental or punitive damages resulting from or caused by any such defects.

Farmer-Helper Machinery reserves the right to make improvements in design or changes in specifications at any time, without incurring any obligations to owners of units previously sold.

No one is authorized to alter, modify, or enlarge this warranty nor the exclusions, limitations, and reservation thereof.

Revised 9-20-

WARRANTY VOID IF REGISTRATION IS NOT RECEIVED OR RECORDED ONLINE WITHIN 30 DAYS OF PURCHASE DATE OR SHIP DATE, WHICHEVER IS LATER.

FARMER HELPER MACHINERY REGISTRATION

Item_____Model # _____ Purchase Date_____/_____/_____

Purchased From: _____Gift☐ Inv#/Order# _____

Owner Name: _____ Serial # (if Applicable)_____

Owner Address: _____

City: _____ County: _____ ST: _____ Zip Code: _____

Phone: _____ Email: _____

Acceptance of responsibility:
I (Purchaser) have read operators manual and Limited Warranty or someone has read/and explained all instructions to me. I understand this warranty does not cover any labor and that all disputes will be settled by binding arbitration. Binding arbitration is conducted by the Better Business Bureau (BBB) located at 4004 SW Kruse Way Place Ste 375 Lake Oswego OR 97035 or the current BBB location closest to Betst Products, I acknowledge my Limited Warranty is void if any attempt to repair or replace defective parts has been made by unauthorized personnel. I acknowledge receipt of my Operators Manual and have read the Safe Operation Section. I acknowledge understanding maintenance and safe operation requirements, item specifications, operation, controls, and storage requirements. I **understand that I alone am responsible for proper maintenance, care and safe operation of this Value-Leader item.**

I (Purchaser) agree that persons not familiar with the operation of this item should not be allowed to use it. Children especially should not operate or be near Power Products when in use. ANYONE OPERATING FARMER-HELPER PRODUCTS SHOULD HAVE READ OPERATIONS MANUALS AND SAFETY MANUALS.

Owners Signature: x _____ Date: ___/___/___

You must sign this warranty and mail or fax copy to Betstco, 83371 Melton Rd , Creswell OR 97426. If you prefer you may complete your registration on line. This warranty is not effective unless the Purchaser completes Registration and Warranty Form within 30 days of purchase or ship date whichever is later.

NOTE: We may refuse warranty of any kind unless Betst Product, llc., receives a completed, legible and signed warranty registration. It is the responsibility of the purchaser to assure that registration document is received by Betst Products, llc..

Revised 9-20-14

2 YEAR EXTENDED WARRANTY & REGISTRATION

Farmer Helper Machinery Branded Products

2 YEAR EXTENDED WARRANTY

2 Year Extended Warranty amends to original Recorded Manufacturers Warranty Registration the time period of described coverage. Extended Warranty does not apply to Consumable and Expendable Items as described in Product Warranty Registration.

This Amendment does not affect any other part of recorded Warranty Registration or Policy. This Warranty Extension is the soul responsibility of Betst Products, llc.

No one is authorized to alter, modify, or enlarge this addition to the original manufacturers recorded warranty registration.

EXTENDED REGISTRATION & PAYMENT MUST BE RECEIVED WITHIN 30 DAYS OF PURCHASE DATE

EXTENDED WARRANTY REGISTRATION

Product & Model # : _____
Serial #: _____
Owner Name: _____
Betst Products Invoice # _____

Acceptance of responsibility:
I (Purchaser) have Read and understand the Extended Warranty or someone has read/and explained all the above to me. I understand this extended warranty does not cover any labor. I have filed my Original Warranty Registration and fully understand my requirements. I **understand that I alone am responsible for proper maintenance, care and safe operation of this tractor implement.**
I (purchaser) also understand that persons not familiar with the operation of this equipment should not be allowed to use it. Children especially should not operate or be near equipment. ANYONE OPERATING EQUIPMENT SHOULD HAVE READ ALL EQUIPMENT OPERATIONS MANUALS AND SAFETY MANUALS..

Owners Signature: x _____
Date: _____

You must sign this extended warranty and email to cservice@betstco.com or mail copy to Betst Products, 83371 Melton Rd, Creswell OR 97426. This extended warranty is not effective unless the Purchaser faxes or mails this Registration Form within 30 days of purchase. NOTE: The manufacturer may refuse warranty of any kind unless Betst Products receives a completed, legible and signed extended warranty registration. It is the responsibility of the purchaser to assure that this registration document is received by Betst Products.

To Make Payment for Extended Warranty Call: 541-895-3083